Scale	Dr By	TEAM WHYACHI ROBOTICS	814 E. FIRST AVE. DORCHESTER, WI.	A SIZE	TWA40	OF	A REV.
FULL	TSE						
Date 2-21-2002	Chk By						

TITLE: TWA 40 GEARBOX W/ WHEEL

FOR: 7.78:1 RATIO

THIS DRAWING AND ALL INFORMATION PRESENTED IS THE PROPERTY OF TEAM WHYACHI LLC AND IS STRICTLY CONFIDENTIAL. IT SHALL NOT BE COPIED REPRODUCED OR REVEALED WITHOUT WRITTEN CONSENT. THIS DRAWING MUST BE RETURNED UPON REQUEST.

TOLERANCE (EXCEPT AS NOTED)
.0 ——— .032
.00 ——— .015
.000 ——— .005

QTY.	DESCRIPTION	TWR IDENTIFICATION NO.

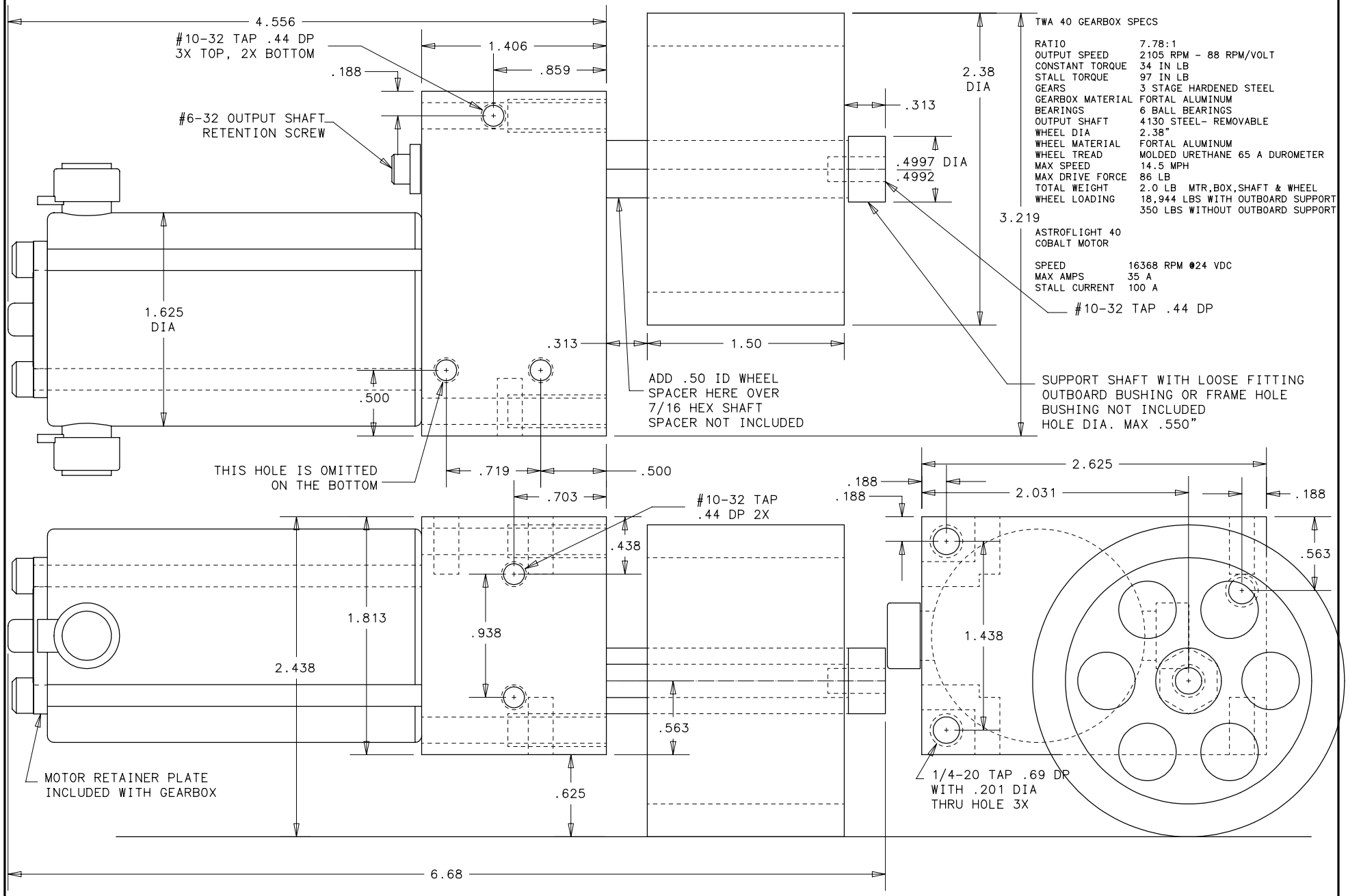

TWA 40 GEARBOX SPECS

RATIO	7.78:1
OUTPUT SPEED	2105 RPM - 88 RPM/VOLT
CONSTANT TORQUE	34 IN LB
STALL TORQUE	97 IN LB
GEARS	3 STAGE HARDENED STEEL
GEARBOX MATERIAL	FORTAL ALUMINUM
BEARINGS	6 BALL BEARINGS
OUTPUT SHAFT	4130 STEEL- REMOVABLE
WHEEL DIA	2.38"
WHEEL MATERIAL	FORTAL ALUMINUM
WHEEL TREAD	MOLDED URETHANE 65 A DUROMETER
MAX SPEED	14.5 MPH
MAX DRIVE FORCE	86 LB
TOTAL WEIGHT	2.0 LB MTR,BOX,SHAFT & WHEEL
WHEEL LOADING	18,944 LBS WITH OUTBOARD SUPPORT
	350 LBS WITHOUT OUTBOARD SUPPORT

ASTROFLIGHT 40
COBALT MOTOR

SPEED	16368 RPM @24 VDC
MAX AMPS	35 A
STALL CURRENT	100 A