Functional Block Diagram

The diagram below describes the function of the board and how it is hooked up to an RC receiver, battery pack and motor. This diagram is a functional representation of how it works and is not a physical representation of how to hook it up.

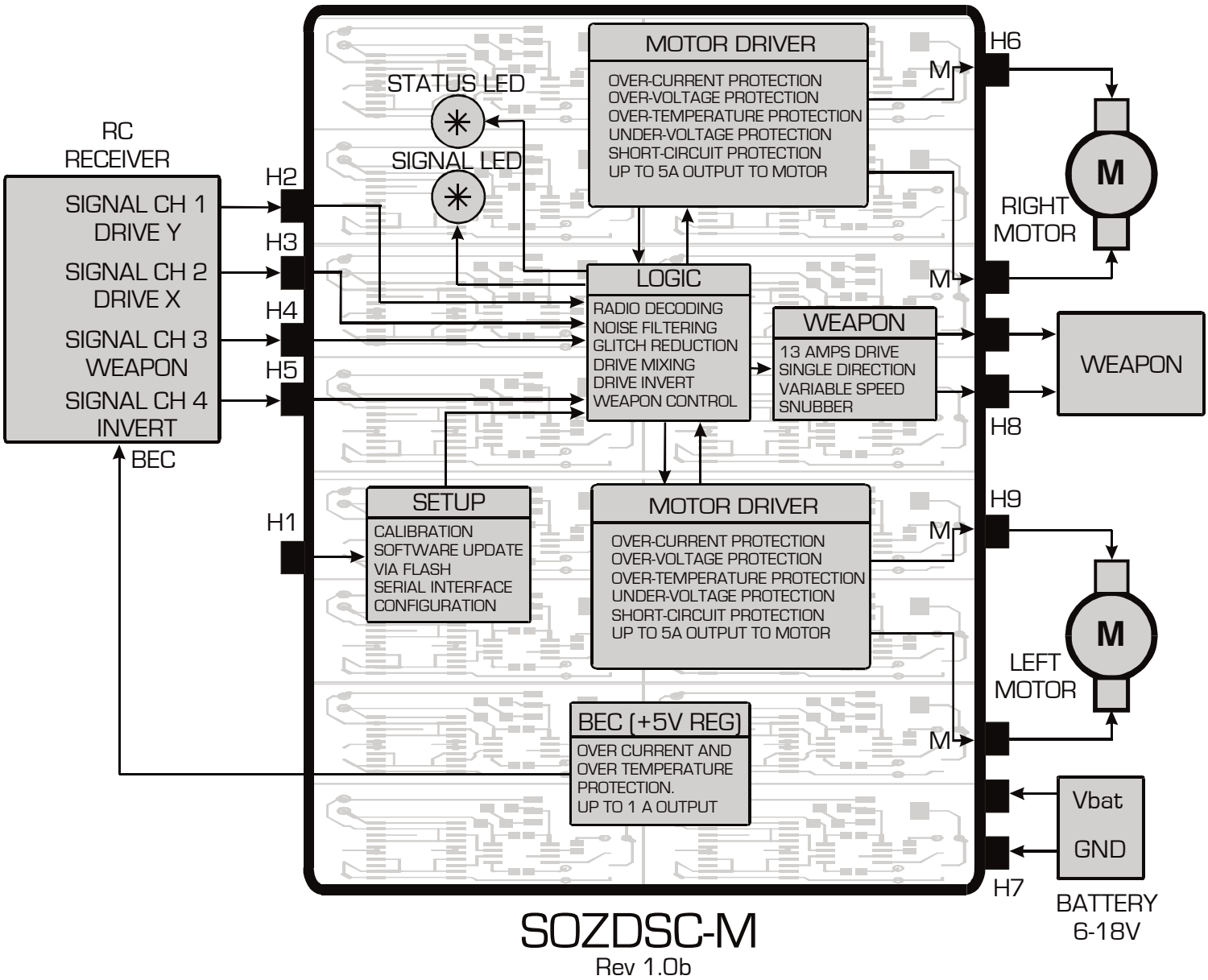

Electrical Specification

Recommended Input Voltage: 6 - 18V DC (undervoltage protected at 5.0V)
Maximum Current per drive motor: 5A (overcurrent protected)
Recommended Current Draw from +5V Regulator (BEC): 500mA Maximum Continuous
Recommended Current Draw from Weapon Motor: 13A maximum
Drive Motor Output Resolution: 64 steps forward, 64 steps reverse.
Weapon Motor Output Resolution: 128 steps forward. No reverse

Mechanical Specification

Weight: 0.275 oz (8 g)

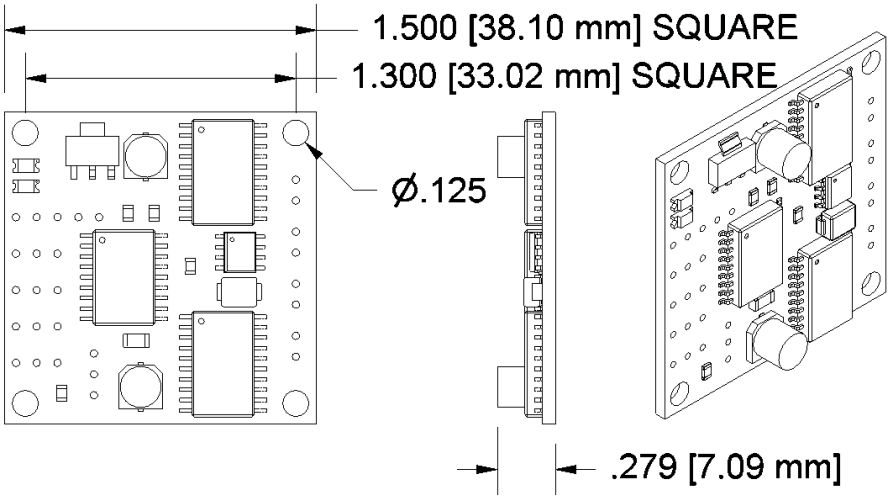

Hookups

First solder 3-lead radio connectors to H2 and H3. Make sure to use the correct connector for your receiver. Manufacturers have different color schemes and pinouts for the 3 pin connector. If you do not wire up the 3 pins properly, you risk destroying the SOZDSC-M as well as your receiver! If you are going to be using the invert and weapons features, you should connect 2 more 3-lead radio connectors to H4 and H5.

Next wire up 2 drive motors to the 2 pins labeled **M** on H6 and H9. The motor polarity decides which direction your motor will turn. If they are not turning the direction you want, swap the pins.

Now wire up your weapon motor to the 2 pins labeled + and - on H8. The motor polarity decides which direction your motor will turn. If it is not turning the direction you want, swap the pins.

Next connect your battery pins + and - on H7. Be careful not to get the polarity wrong, the board does not have reverse polarity protection and hooking it up backwards will destroy the board.

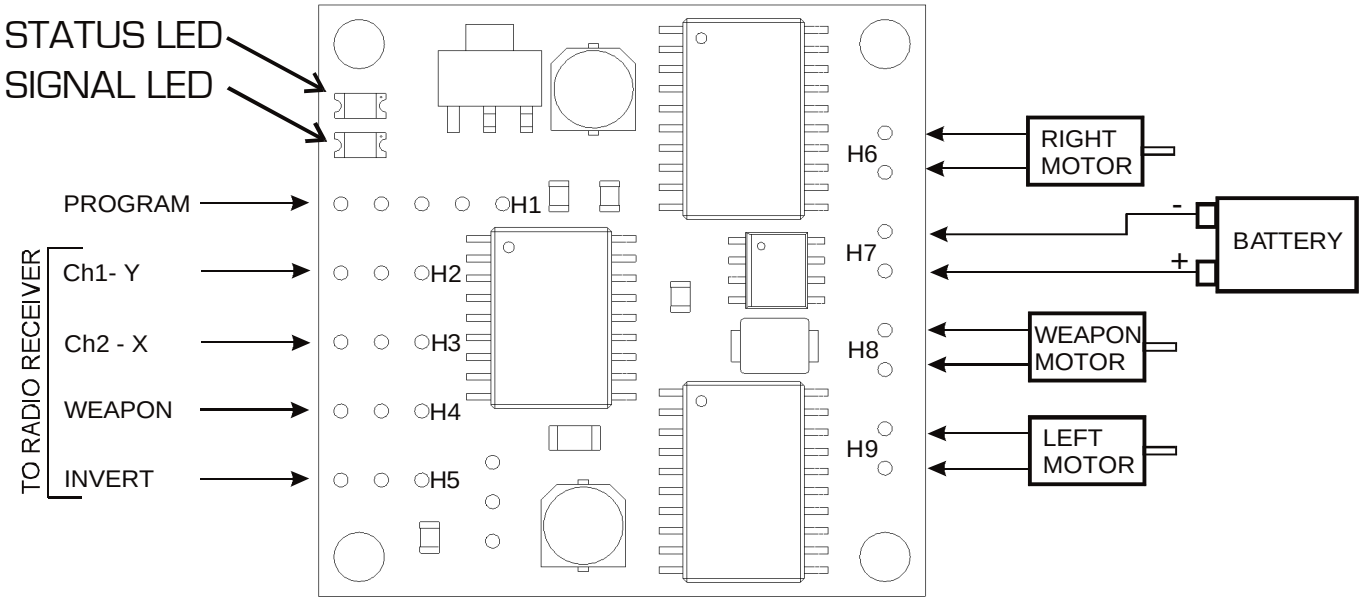

Power Up

At first power up, the user should calibrate the controller. See below. Under normal operation, the SIGNAL LED will be on when a valid signal is being received. The LED will actually pulse at 25Hz, turn on and off 25 times a second, in other words, blinking very fast. The STATUS LED will be on during calibration. During normal operation, you should see the STATUS LED blinking from time to time.

Calibration

It is essential that the user calibrate the unit before use. Carefully follow these instructions.

1. Zero all your trims on your radio transmitter. Consult your transmitter manual for help.

2. Make sure the board power is turned off.

3. Connect receiver Ch1 to H2 and Ch2 to H3. Do not connect anything to H4 and H5.

4. Connect supplied jumper on H1 across pins 1 and 2.

5. Turn on power to the board. The Status LED should be on. The motors will not move during calibration.

6. Move your control stick all around. This will tell the board the extremities of your controller.

7. Leave your control stick at its center position and put your transmitter down.

8. Remove the jumper with the power still attached.

9. Your board is now calibrated. You can repeat calibration at any time.

Mixing

These boards come pre-configured for mixing, so if you have mixing already setup in your radio, you should turn it off. The on-board mixing will mix your joystick control so the left and right drive motors turn properly. If your robot is not behaving properly, double check your receiver connections. Make sure your left and right motors are connected correctly. You may need to swap the polarity on one or both of your drive motors.

Weapon Operation

The weapon control will only drive your motor in one direction, but it can vary in power from 0 to 100% to allow you to set the speed in which it turns. When your stick/control is at 0% or negative, the control is off. When your stick/control is positive, your weapon will be operating.

Invert Control

This control will invert the operation of your robot, assuming your robot is invertible. Connect it to a 2 position switch on your radio. When the switch is on, your drive will be inverted. When it is off, your drive will be normal.

Battery Power

The board can run on a 6V battery and will continue to run at lower voltages until the undervoltage protection kicks in around 5.0V. For best results, its better to run off a higher voltage such as 7.2V or higher so you can get all the life out of the battery. NiCad and NiMh batteries are an ideal choice as batteries for high draw motors. The recommended maximum voltage is 18V, but the physical limit is 24V.

NEVER APPLY A NEGATIVE VOLTAGE (REVERSE POLARITY) TO THE BOARD, IT WILL DAMAGE IT.

BEC

The boards come equipped with a built in BEC, or Battery Eliminator Circuit. This will provide +5V power for your receiver, thereby eliminating the need for a receiver battery.

Overtemperature, Overcurrent and Undervoltage Protection

The left and right motor drive is protected against the following:

Overtemperature - When the motor drive gets too hot, it will shut down until it cools off a bit.

Overcurrent - The left or right side will shut down when the motors are trying to draw over 5-7 amps. It will resume operation right after the condition has been rectified.

Undervoltage - The board will shut down when voltage drops below 5V and will resume when the voltage comes back up to 5.2V.

In all cases, while the board is shut down because of any of these faults, it will turn on the STATUS LED while it is shut down. The LED will turn off as soon as the board is running again.

The weapon motor control has no protection. It is important that you do not use too big a motor and draw too much current or generate too much heat.

For technical help, please email support@sozbots.com.